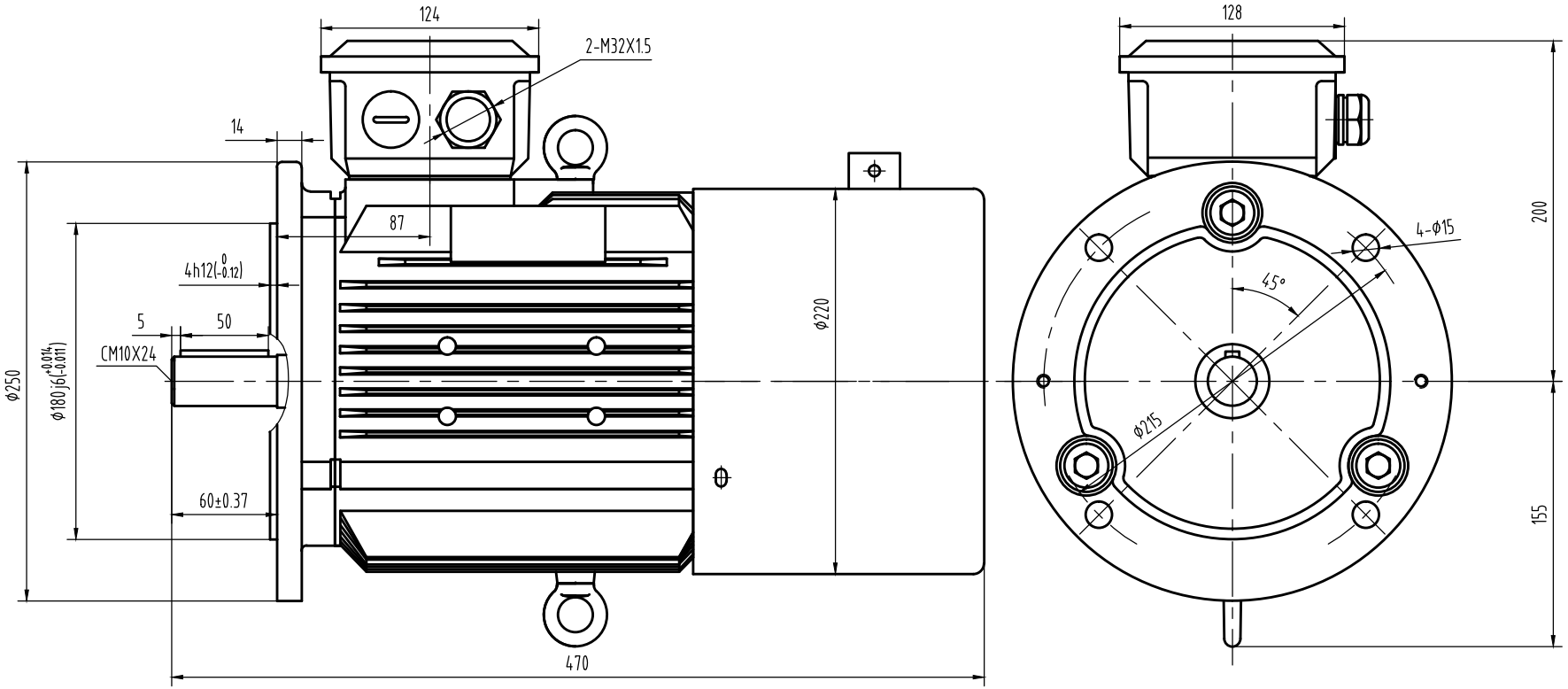


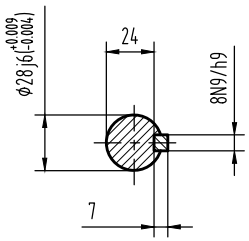


| Mark | No. | Zone | File changing No. | Signature | Date |
|---|---|---|---|---|---|
| Design | | | Standard | | |
| Check | | | | | |
| Auditing | | | | | |
| Technics | | | Approval | | |

| Sign | Weight | Scale |
|---|---|---|
| | | 1:2.5 |
| Total page | page No. | |

OUTLINE

OMV0-112M0-04~08P B3

Wuxi OMEC LTD.